1. How to Use This Manuals

A: HOW TO USE THIS MANUALS

1. STRUCTURE

Each section consists of SCT that are broken down into SC that are divided into sections for each component. The specification, maintenance and other information for the components are included, and the diagnostic information has also been added where necessary.

2. CONTENTS

The first page has an index with tabs.

3. COMPONENT

Illustrations are provided for each component. The information necessary for repair work (tightening torque, grease up points, etc.) is described on these illustrations. Information is described using symbol.
To order parts, refer to parts catalogue.

Example:

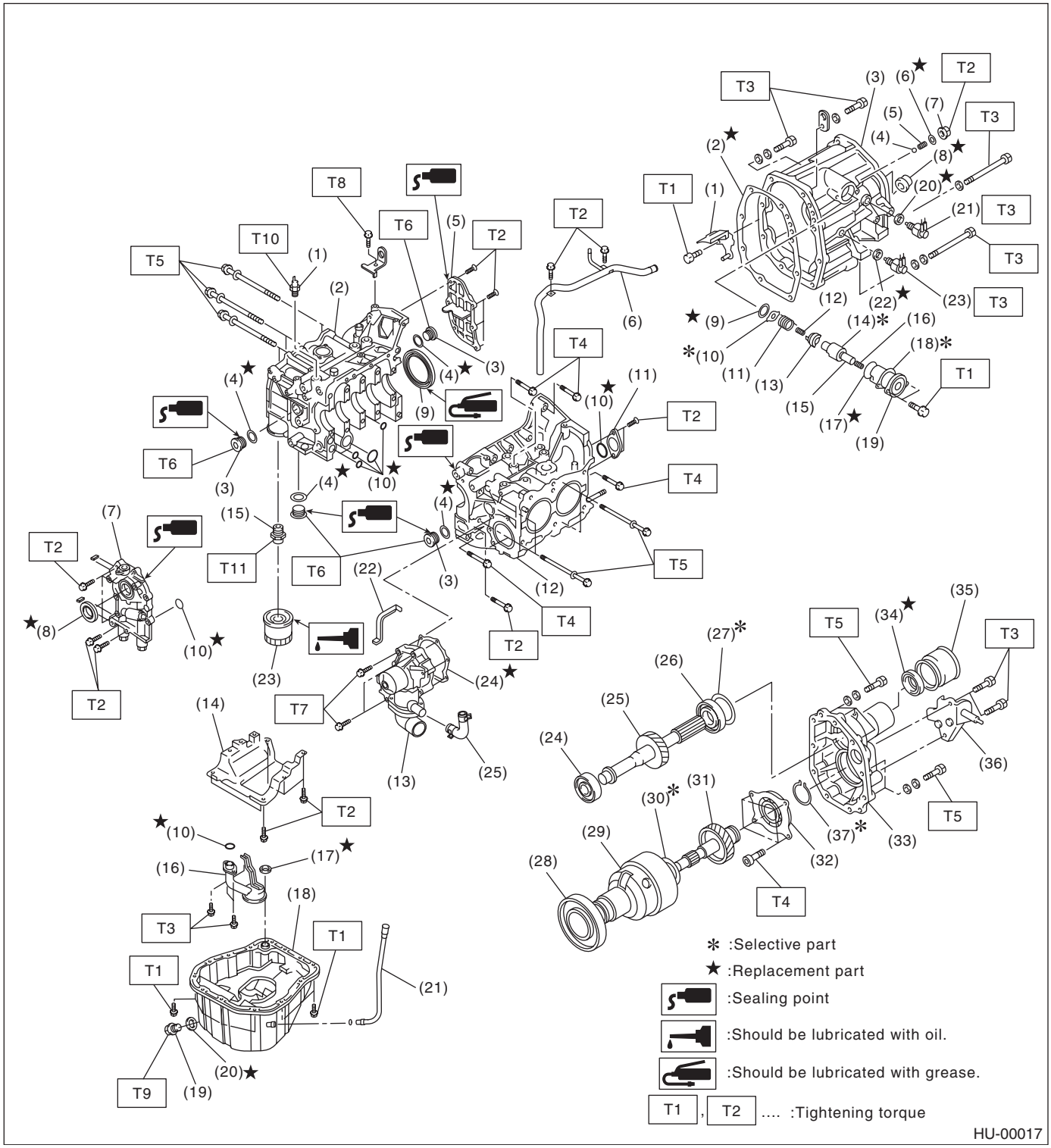

4. SPECIFICATION

If necessary, specifications are also included.

5. INSPECTION

Inspections to be carried out before and after maintenance are included.

6. MAINTENANCE

- Maintenance instructions for serviceable parts describe work area and detailed step with illustration. It also describes the use of special tool, tightening torque, caution for each procedure.
- If many serviceable parts are included in one service procedure, appropriate reference is provided for each parts.

Example:

15.Main Shaft Assembly for Single-Range (A)

A: REMOVAL (B)

1) Remove the manual transmission assembly from vehicle. <Ref. to MT-33, REMOVAL, Manual Transmission Assembly.> (C)

---

11) Tighten the lock nuts to the specified torque using ST1 and ST2.

NOTE: (D)
Secure the lock nuts in two places after tightening.

ST1	498937000	TRANSMISSION HOLDER
ST2	499987003 (E)	SOCKET WRENCH (35) (F)

Tightening torque:
118 N·m (12.0 kgf-m, 86.8 ft-lb) (G)

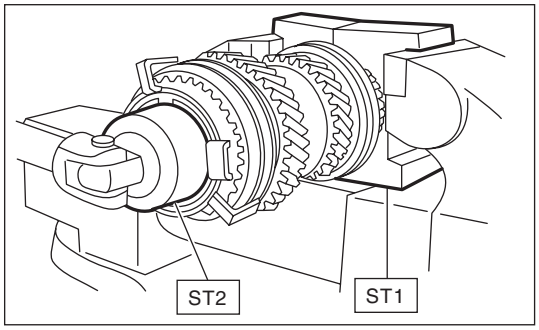

(H)

HU-00020

(A)	Component	(D)	Cautions	(G)	Tightening torque
(B)	Process	(E)	Tool number of special tool	(H)	Illustration
(C)	Reference	(F)	Name of special tool		

7. DIAGNOSIS

Tables showing a step-by-step process make it easy to conduct diagnosis.

8. SI UNITS

Measurements in these manuals are according to the SI units. Metric and yard/pound measurements are also included.

Example:

Tightening torque:
44 N·m (4.5 kgf-m, 33 ft-lb)

9. EXPLANATION OF TERMINOLOGY

- **List**

AAI	:	Air Assist Injection
A/B	:	Airbag
ABS	:	Anti-lock Brake System
A/C	:	Air Conditioner
ACC	:	Accessory
A/F	:	Air Fuel Ratio
ALT	:	Generator
ASSY	:	Assembly
AT	:	Automatic Transmission
ATF	:	Automatic Transmission Fluid
AVCS	:	Active Valve Control System
AWD	:	All Wheel Drive
BATT	:	Battery
CAN	:	Controller Area Network
CD-R/RW	:	CD Recordable/Rewritable
COMPL	:	Complete
CPU	:	Central Processing Unit
DCCD	:	Driver's Control Center Differential
DOHC	:	Double Overhead Camshaft
DTC	:	Diagnosis Trouble Code
DOJ	:	Double Offset Joint
DVD	:	Digital Versatile Disc or Digital Video Disc
EBD	:	Electric Brake Distribution
ECM	:	Engine Control Module
EGI	:	Electronic Gasoline Injection
E/G	:	Engine
EGR	:	Exhaust Gas Recirculation
ELR	:	Emergency Locking Retractor
EX	:	Exhaust
ETC	:	Electronic Throttle Control
F/B	:	Fuse & Joint Box
FL	:	Fusible Link
FWD	:	Front Wheel Drive
GPS	:	Global Positioning System
HID	:	High-Intensity Discharge
H/U	:	Hydraulic Unit
IG	:	Ignition
IN	:	Intake
INT	:	Intermittent
I/O	:	Input / Output
ISC	:	Idle Speed Control
LED	:	Light Emitting Diode
LH	:	LH (Left Hand)
LSD	:	Limited Slip Differential
M/B	:	Main Fuse & Relay Box
MD	:	Mini Disc
MFI	:	Multipoint Fuel Injection
MP-T	:	Multi-Plate Transfer
MT	:	Manual Transmission
NA	:	Natural Aspiration
NC	:	Normal Close (Relay)
NO	:	Normal Open (Relay)
OP	:	Option Parts
OBD	:	On-Board Diagnosis
P/S	:	Power Steering
P/W	:	Power Window
PCD	:	Pitch Circle Diameter
PCV	:	Positive Crankcase Ventilation
PID	:	Parameter Identification
RAM	:	Random Access Memory
RH	:	RH (Right Hand)
ROM	:	Read Only Memory
rpm	:	Revolution Per Minute
SOHC	:	Single Overhead Camshaft
SRS	:	Supplemental Restraint System
SSM	:	Subaru Select Monitor
ST	:	Special Tool
STD	:	Standard
SW	:	Switch
T/B	:	Turbo charger
TGV	:	Tumble Generator Valve
T/M	:	Transmission
UV	:	Ultraviolet
V.I.N.	:	Vehicle Identification Number
ViS-C	:	Viscous Coupling
VSV	:	Vacuum Switching Valve
VTD	:	Variable Torque Distribution
W/H	:	Wiring Harness
Pr	:	Primary
2ndr	:	Secondary

SPECIFICATIONS

SPC

Page

1. Impreza 2